NOVA LUCE

PRODUCT DATASHEET

Version: 001

PRODUCT PHOTOGRAPH



GENERAL INFORMATION

Product Code	**9236454**
Collection	**Decorative**
Product Category	**Wall**
Product Family	**LAVINA**
Mounting Location	**Wall**
Application Enviroment	**Indoor**
Specifications	

DIMENSION & WEIGHT

L x W x H (cm)	**25 x 8.3 x 26**
Weight (kg)	**1.1**

TECHNICAL DRAWING

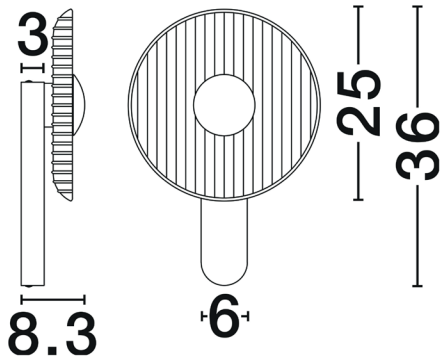

MATERIAL & COLOR

Product Color	**Silver, Gray**
Body Material	**Glass , Metal**

APPLICATION & MOUNTING

Ambient Working Temp.	**Max 45 °C**
Type of Protection	**IP20**
Dimmable	**No**
Type of Dimming (Optional)	
Mounting Type	**Surface**
Mounting Depth (cm)	**N/A**
Led Module Replaceable	**No**
Light Source	**LED**

NOVA LUCE S.A

Schimatari Viotias
32009, Greece

+30 22620 58 121
+30 22620 56 743

info@novaluce.com
www.novaluce.com

NOVA LUCE

PRODUCT DATASHEET

Version: 001

ELECTRICAL DATA

Power (Nominal)	**8W**
Input voltage (Nominal)	**220-240 Vac**
Mains Frequency	**50/60**

PHOTOMETRICAL DATA

Luminus Flux	**320Lm**
Color Temperature	**3000K**
Light Color (Designation)	**Warm White**

WARRANTY

Warranty	**3 Years**

CERTIFICATES

Certificates	**CE, UKCA**

NOVA LUCE S.A

Schimatari Viotias
32009, Greece

+30 22620 58 121
+30 22620 56 743

info@novaluce.com
www.novaluce.com