NOVA LUCE

PRODUCT DATASHEET

Version: 001

## PRODUCT PHOTOGRAPH

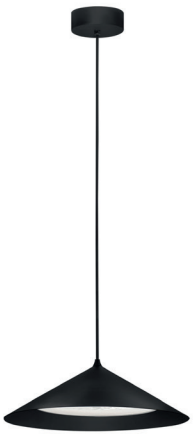

## GENERAL INFORMATION

| | |
|---|---|
| Product Code | **9236450** |
| Collection | **Decorative** |
| Product Category | **Suspension** |
| Product Family | **DARIO** |
| Mounting Location | **Ceiling** |
| Application Enviroment | **Indoor** |
| Specifications | |

## DIMENSION & WEIGHT

| | |
|---|---|
| L x W x H (cm) | **40 x 150** |
| Weight (kg) | **3.2** |

## TECHNICAL DRAWING

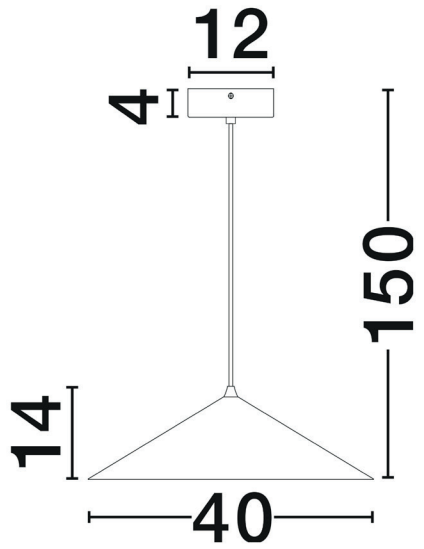


## MATERIAL & COLOR

| | |
|---|---|
| Product Color | **Matt Black** |
| Body Material | **Metal , Glass** |

## APPLICATION & MOUNTING

| | |
|---|---|
| Ambient Working Temp. | **Max 45 °C** |
| Type of Protection | **IP20** |
| Dimmable | **No** |
| Type of Dimming (Optional) | |
| Mounting Type | **Surface** |
| Mounting Depth (cm) | **N/A** |
| Led Module Replaceable | **No** |
| Light Source | **LED** |

NOVA LUCE S.A

Schimatari Viotias
32009, Greece

+30 22620 58 121
+30 22620 56 743

info@novaluce.com
www.novaluce.com

NOVA LUCE

PRODUCT DATASHEET

Version: 001

## ELECTRICAL DATA

| | |
|---|---|
| Power (Nominal) | **21W** |
| Input voltage (Nominal) | **220-240 Vac** |
| Mains Frequency | **50/60** |

## PHOTOMETRICAL DATA

| | |
|---|---|
| Luminus Flux | **1667Lm** |
| Color Temperature | **3000K** |
| Light Color (Designation) | **Warm White** |

## WARRANTY

| | |
|---|---|
| Warranty | **3 Years** |

## CERTIFICATES

| | |
|---|---|
| Certificates | **CE, UKCA** |

NOVA LUCE S.A

Schimatari Viotias
32009, Greece

+30 22620 58 121
+30 22620 56 743

info@novaluce.com
www.novaluce.com