NOVA LUCE

9268051

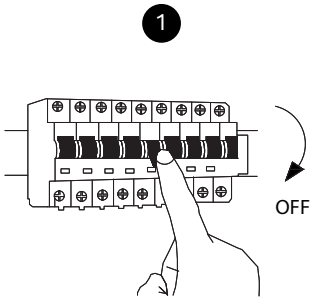

Turn off the general switch

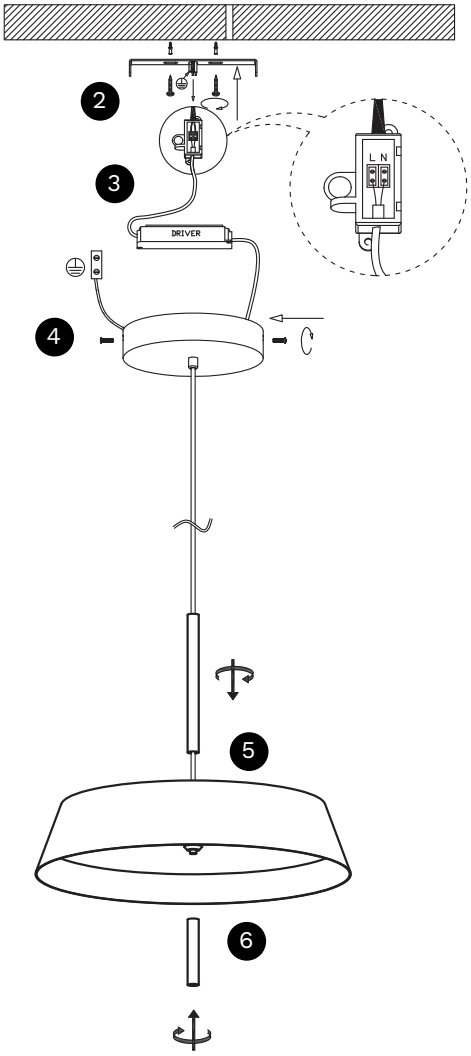

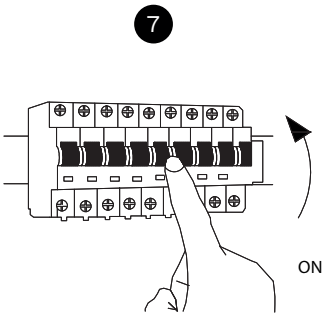

Turn on the general switch

1. Turn off general switch
2. Drill a holes, apply plastic anchors with screws
3. connect wires
4. Apply side screws
5. Apply the element by rotating\
6. Apply the buttom cap
7. Turn on the general switch