NOVA LUCE

9105203

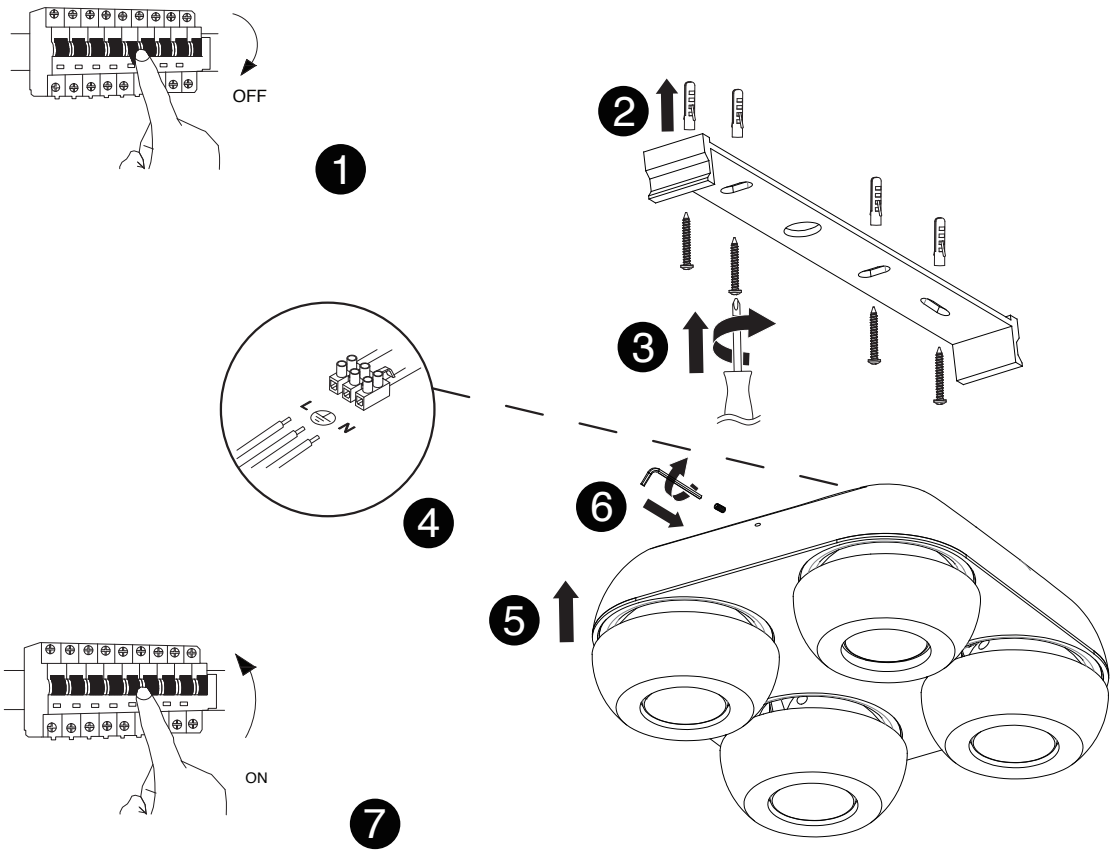

1. Turn off the general switch
2. Drill holes and apply plastic anchors
3. Apply screws
4. Connect the wires
5. Put the product into place
6. Apply the side screws
7. Turn on the general switch